Robell Collection Spec Sheet

Description: Lever Handle, Square Rosette, Lock on Lever,
Includes Separate Deadbolt Lock, 5” Lever

MEGA HANDLES
www.megahandles.com
sales@megahandles.com

Series #EN600

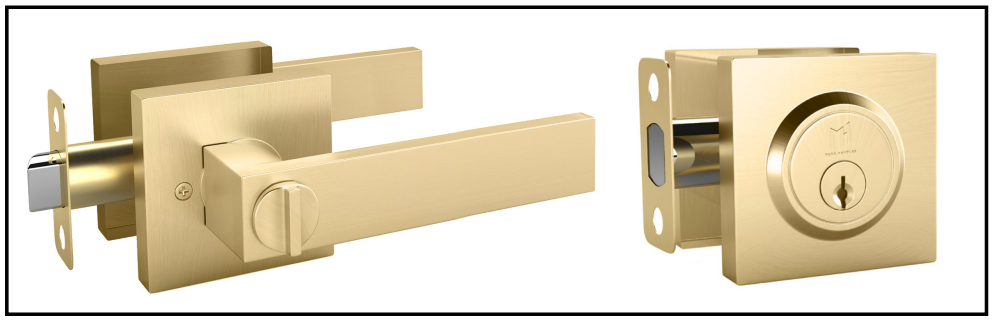

ENTRANCE
GATE & BED

FINISH

FINISH SHOWN Satin Brass (SB)
ALSO AVAILABLE Satin Nickel (SN), Matte Black (MB)

FUNCTIONS

FUNCTION SHOWN
Entrance Combo

SPECIFICATIONS

Door Prep	Cross Bore: 2-1/8” / Edge Bore: 1”
Backset	Fits 2-3/8” & 2-3/4”
Latch	Entry + Deadbolt: 2-3/8” & 2-3/4”
Faceplate	2” X 2-1/4” Radius
Screws	304 Stainelss Steel, Stronger Material
Door Thickness	1-3/8” - 1-3/4” Standard Doors
Handing	Non Handed
Ansi/Bhma	Exceeds ANSI/BHMA Grade 3 Requirements
Cylinder	2xSolid Brass/5 Pin/Re-key Function
Lever	Zinc Alloy Square Shape/5.00” Length
Reversible	Fits Right and Left Doors
Rosette	Square Shape/Measurement is 65*65mm

How to calculate the product Model #:

Series: EN
Rosette: Square (E)
Series #: 600
Finish: Satin Brass (SB), Satin Nickel (SN), Matte Black (MB)

Example for the image shown:
Series: EN
Rosette: E
Series #: 6
Finish: SB
Model #: ENE6SB
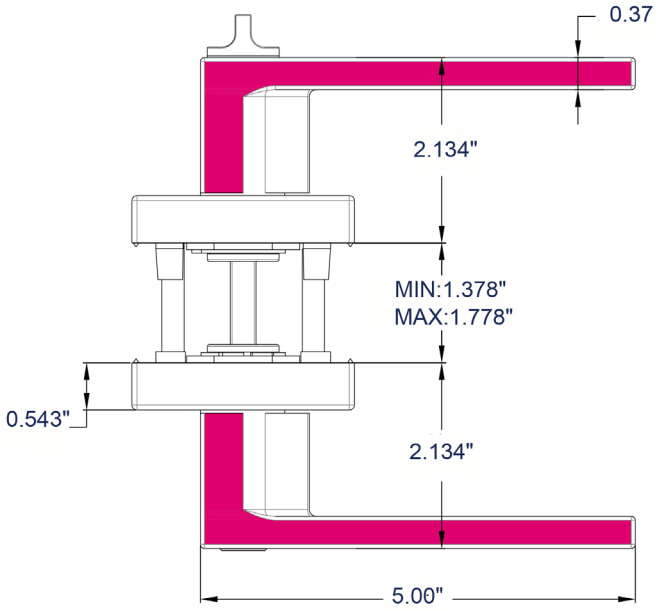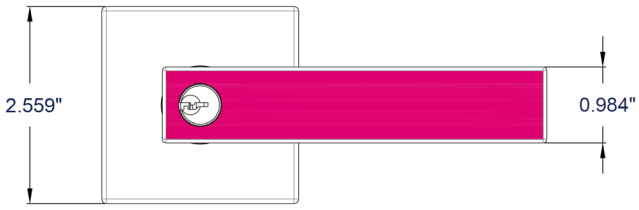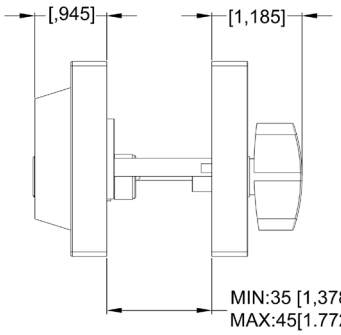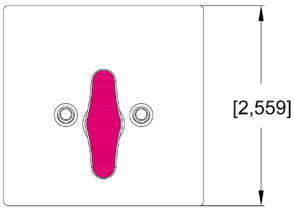
SPECIFICATION DRAWING